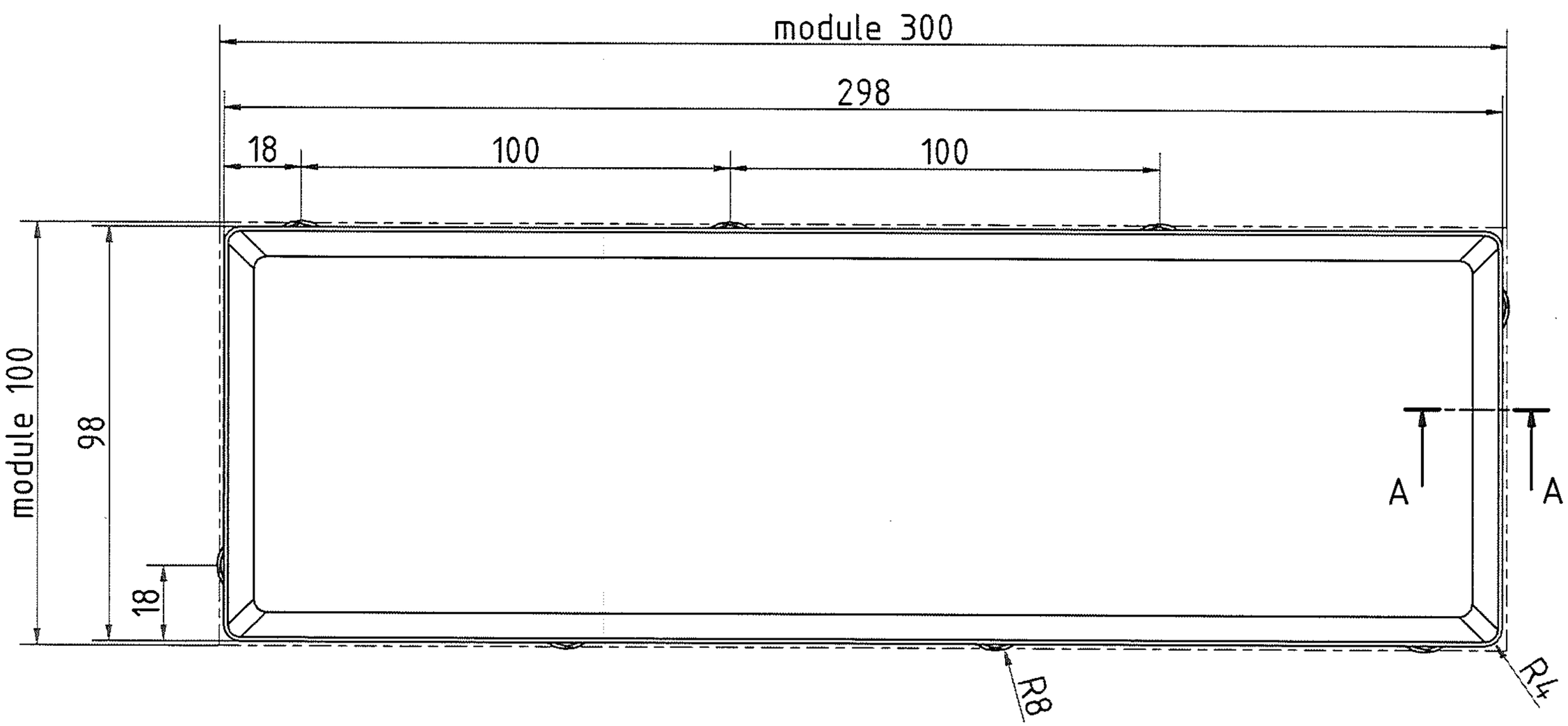

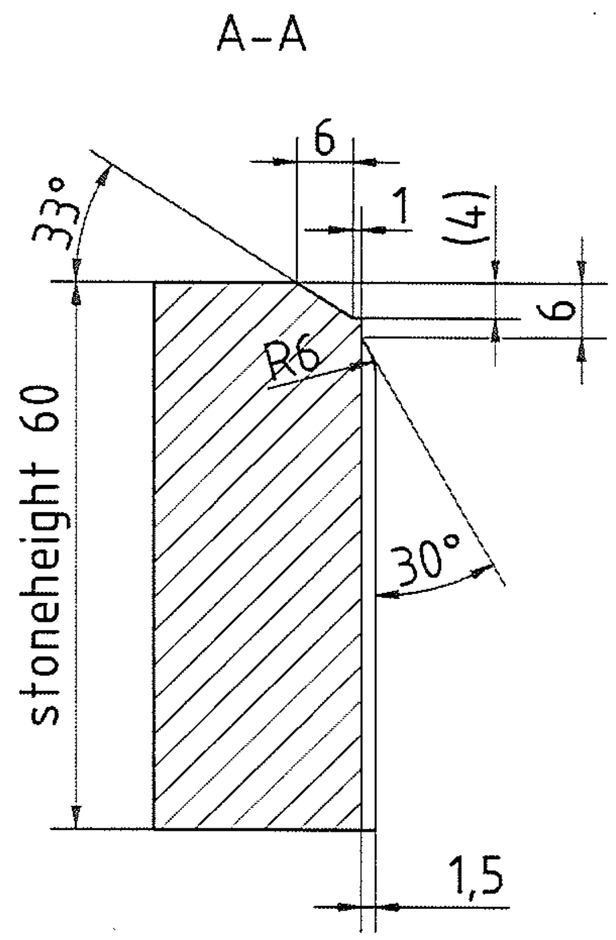

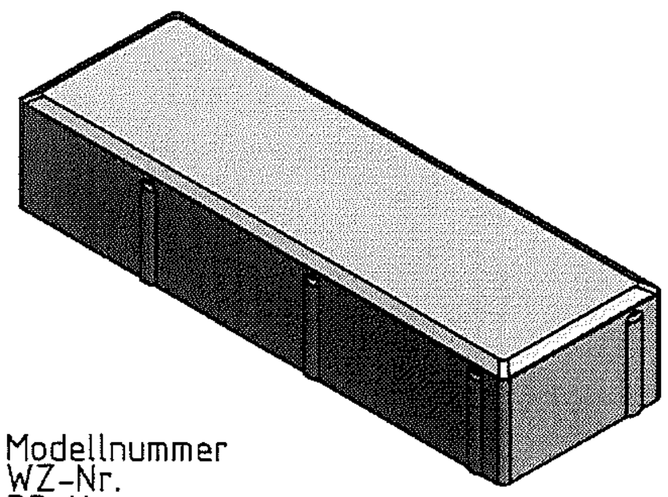

Modellnummer
WZ-Nr.
DP-Nr.

Dieus Cyr
07/18/14

Customer	Machine	ERP-Item	DXFL QTY -
Plant	Pallet Size	Zuschnitt : Norm :	Verfahren :
Order No.	Date / Name	Rectangle 298x98x60	
CHG	14.07.14 / blechschmidt_a	chamfer (6+1)x4 / (6+1)x33° / spacers 1,5mm(R8) n.d. 07.1210602.00303	
M.Check			
Order Check			
Entry / Modification / Date / Name	ITNo. 09_1210612_00349_IPT1.IPT	09.1210612.00349.IDW1	ver. 1
		org. Artikelnr.: 09.1210612.00346	

KOBRA

face no: 08.1210610.00948
body no: 07.1210602.00303
surface: 0,32 ft²
volume: 0,062 ft³

According to General terms and conditions KOBRA is not responsible for any infringements of protected rights and third party claims of shown designs and therefore delivered products.